High Performance Marine Satellite Antenna Systems

Intellian® t110

Most powerful and reliable satellite TV antenna with 3-axis stabilization system.

Featuring

- 41.3 inch (1.05m) dish diameter maritime satellite TVRO system
- High efficiency, fully automated 3-axis stabilized platform
- Proven mechanical design with utmost simplicity and reliability
- Easy installation and maintenance with less cables and accessories
- Wide elevation range from -15° to 120°
- High-gain design with minimum EIRP 42 dBW
- Incorporates Intellian's most well known patents WRS and DBT
- Compatible with major TV services anround the globe
- 19 inch rack-mount type ACU (Antenna Control Unit)
- Built-in global satellites library
- Incorporates Dual MCU (Micro Control Unit) to accelerate response rate
- Built-in GPS and auto skew-angle control system

Intellian Technologies™
Communicate Smarter

Experience the innovation.

MEMBER OF NMMA National Marine Manufacturers Association

NMEA MEMBER

ISO 9001:2000 UKAS

Intellian Technologies USA, Inc. • Irvine, CA • 949-916-4411 • intelliantech.com

© 2009 Intellian Technologies, Inc. All rights reserved. Intellian®, Intellian Technologies™, k4 are either registered trademarks or trademarks of Intellian Technologies, Inc in the United States and/or other countries. All other logos, trademarks, and registered trademarks are the property of their respective owners. Any contents related to DIRECTV here may not be in accordance with DIRECTV's official policy and guideline.

Intellian® t110

3-axis Satellite TV Antenna System With 1.05m Dish Diameter

Intellian® t110

Intellian t110 is the most powerful and robust 3-axis stabilized satellite TV antenna system on the market. With an outstanding coverage range that outperforms other system in its class. With its 1.05m dish and patented WRS and DBT, fast search and tracking signal lock technologies, the t110 provides a rock-steady satellite signal reception, even in the harshest conditions at sea.

With its built-in global satellite library, the t110 is able to receive TV service from multiple satellites from around the globe. Furthermore, t110's wide elevation range pedestal design provides excellent satellite signal reception for extremely low or high latitude areas.

t110 is built with Intellian's extremely high vibration and shock standards. Its proven mechanical design incorporates Intellian's trademark, simplicity and reliability. The included 19-inch rack mount control unit provides user-friendly operation and a specially designed PC controller software which allows free lifetime system upgrades.

System Diagram

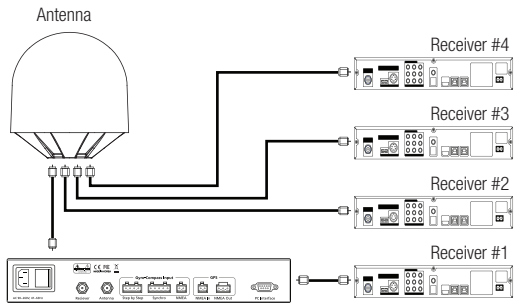

Technical Specifications

Product Model	Specifications
Intellian t110	3-Axis Marine Stabilized Ku-band Satellite TV Antenna System
Radome & Antenna	
Radome (D x H)	133 cm x 142 cm / 52.4" x 56.0"
Dish Diameter	105 cm / 41.3"
Weight	90 kg / 198 lbs
Stabilized Pedestal Assembly	
Pedestal Type	3-axis / Azimuth, Elevation, Cross-level
Azimuth Range	680º (Limited)
Elevation Range	-15º to 120º
Cross Level	Up to ± 30º
Ship's Motion	Roll +/- 25°, Pitch +/- 15°
Stabilization Accuracy	0.2° peak mis-pointing @ max ship motion conditioin
Max Ship's Motion	
Roll / Pitch / Yaw	+/-25°roll, +/- 15° pitch, +/-8° yaw @ 6 sec period
Turning Rate	12 deg/ sec
Antenna Reflector/ Feed Assembly	
Reception Frequency	10.7 ~ 12.75 GHz Ku-band
Polarization	Vertical/ Horizontal or RHCP/ LHCP
Skew Control	Automatic Skew-angle Control
Minimum EIRP	42 dBW
Rack Mount Antenna Control Unit	
Display	2 Line 40 Character Graphic VFD Module
Serial Interface	19200bps 8, N, 1, RS-232C
Power Requirement	110/220V AC, 50/60Hz, 1Phase (Max 100W)
Gyrocompass Interface	NMEA/ Synchro/ Step-by-Step

Antnnena Dimensions

Unit : inch (cm)

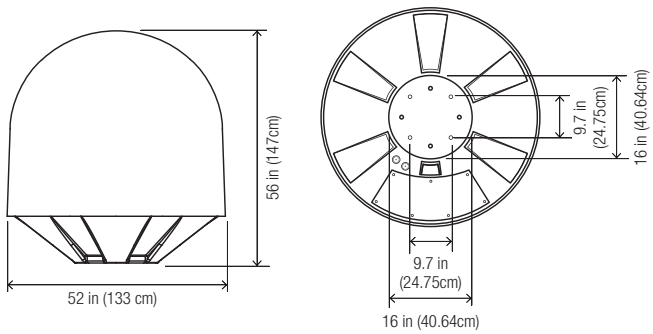

t110 Antenna

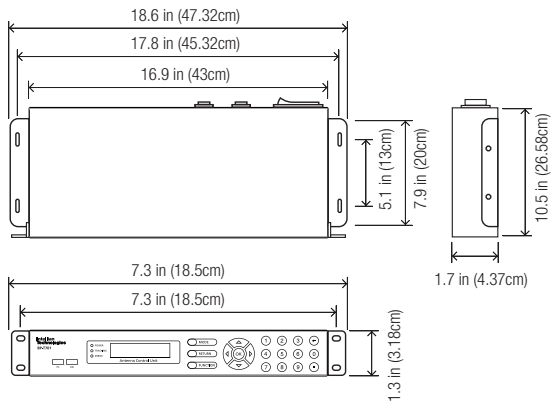

t110 ACU

Intellian Technologies®
Communicate Smarter
ISO 9001 Certified

For more info, visit ***intelliantech.com***

US Headquarters
Americas Region

Intellian Technologies USA, Inc.
9261 Irvine Blvd.
Irvine, CA 92618, USA
Tel +1-949-916-4411
Toll Free +1-888-201-9223
Fax +1-949-271-4183
Email info@intelliantech.com

Headquarters
EMEA & APAC Region

Intellian Technologies, Inc.
2th Floor, Dongik Building
Nonhyundong, Kangnam-gu
Seoul 135-010, South Korea
Tel +82-2-515-4923
Fax +82-2-515-4903
Email info@intelliantech.com

©2008 Intellian Technologies, Inc. All rights reserved. Intellian and the Intellian logo are registered trademarks and DBT, WRS, t110, t series, MIM and Multi-satellite Interface Module are trademarks of Intellian Technologies, Inc. in the U.S. and/or various countries. All other trademarks are the property of their respective owners. Information in this document is subject to change without notice.

Part No. T1-1117S, Rev. 08/2009